FEDERAL SIGNAL
Safety and Security Systems

# Allegiant™ Light Bar

## *Installation, Maintenance, and Service Manual*

25500456
REV. D0 1219
Printed in U.S.A.
© Copyright 2019 Federal Signal Corporation

## Limited Warranty

This product is subject to and covered by a limited warranty, a copy of which can be found at www.fedsig.com/SSG-Warranty. A copy of this limited warranty can also be obtained by written request to Federal Signal Corporation, 2645 Federal Signal Drive, University Park, IL 60484, email to info@fedsig.com or call +1 708-534-3400.

This limited warranty is in lieu of all other warranties, express or implied, contractual or statutory, including, but not limited to the warranty of merchantability, warranty of fitness for a particular purpose and any warranty against failure of its essential purpose.


FEDERAL SIGNAL
Safety and Security Systems

2645 Federal Signal Drive
University Park, Illinois 60484-3167

www.fedsig.com

Customer Support
Police/Fire-EMS: 800-264-3578 • +1 708 534-3400
Work Truck: 800-824-0254 • +1 708 534-3400

Technical Support 800-433-9132 • +1 708 534-3400

# Contents

**Safety Messages** ..... **5**
Safety Message to Installers and Service Personnel of Warning Lights ..... 5
Safety Messages to Operators of Federal Signal Sound/Light Systems ..... 8
**Overview** ..... **10**
LED Lights, Colors, and Flash Patterns ..... 10
Electrical System ..... 10
Controller Options ..... 10
Ambient Light Sensor/AutoDim Option ..... 11
Product Specifications ..... 11
**Reprogramming the Light Bar** ..... **14**
Reprogramming the Light Bar ..... 14
Serial Bars ..... 14
Discrete Bars ..... 14
Making the Electrical Connections for Reprogramming ..... 15
Reprogramming the Discrete Light Bar—45 inches or Larger ..... 15
Reprogramming the Discrete Light Bar—21 inches ..... 16
DIP Switch ..... 16
**Wiring the Allegiant Light Bar** ..... **19**
Planning the Electrical Installation ..... 19
Connecting Power to the Light Bar ..... 20
**Maintaining and Servicing the Allegiant** ..... **27**
Servicing the Light Bar Domes ..... 27
Cleaning the Light Bar Lens or Dome ..... 27
Removing and Reinstalling the Light Bar Dome ..... 28
Replacing a PCB ..... 29
Resetting the Controller ..... 31
Troubleshooting the Light Bar ..... 32
**Getting Technical Support and Service** ..... **34**
Getting Repair Service ..... 34
Ordering Replacement Parts ..... 35

## Figures

Figure 1 Light Bar Positions ..... 12
Figure 2 Power and cable connections ..... 21
Figure 3 Relay for isolating devices with large filter capacitors ..... 22
Figure 4 SignalMaster 331105 controller (external SignalMaster control) ..... 23
Figure 5 SmartSiren® SS2000SM Series controller (external SignalMaster control) ..... 24
Figure 6 SignalMaster control functions wired to ground for external SIM control ..... 25
Figure 7 SignalMaster control functions wired to 12 Vdc for Internal control ..... 26
Figure 8 Four barrel nuts in passenger-side end dome ..... 28
Figure 9 Locations of ROC PCBs ..... 29
Figure 10 ROC Connections ..... 30

## Tables

Table 1 Dimensions ..... 11
Table 2 Light Specifications ..... 11
Table 3 Electrical and Temperature ..... 11
Table 4 Light Bar functions ..... 13
Table 5 Wire functions and fuse requirements ..... 15
Table 6 Allegiant Flash Patterns (45 inches and larger) ..... 16
Table 7 Allegiant Discrete Mode 2 Flash Patterns (45 inches and larger) ..... 17
Table 5 21-inch Allegiant Flash Patterns ..... 18
Table 8 SignalMaster control wires and warning patters (Internal SM control) ..... 22
Table 9 Cross reference for controller leads (external Serial Interface Module control) ..... 23
Table 10 Troubleshooting tips ..... 32
Table 10 Replacement parts ..... 35

# Safety Messages

For your safety, read and understand this manual thoroughly before installing, operating, and servicing the Allegiant light bar. The safety messages presented in this chapter and throughout the manual are reminders to exercise extreme care at all times. Read and understand the safety instructions and keep this manual close at hand for reference. To download copies of this manual, go to www.fedsig.com or call the Federal Signal Service Department at 1-800-433-9132, 7 AM to 5 PM, Monday through Friday (CT).

## Safety Message to Installers and Service Personnel of Warning Lights

**⚠ WARNING**

**Before Installation or Service**

*Qualifications*

- To properly install or service this equipment, you must have a good understanding of automotive mechanical and electrical procedures and systems, along with proficiency in the installation and servicing of safety warning equipment. Always refer to the vehicle's service manuals when performing equipment installations on a vehicle.

*Light Hazards*

- In order to be an effective warning device, this product produces bright light that can be hazardous to your eyesight when viewed at a close range. Do not stare directly into this lighting product at a close range or permanent damage to your eyesight may occur.
- Do not install the light system in an area that would block, impair or blind the driver's vision. Ensure that the light system is mounted in a position that is outside the driver's field of vision so the driver can maintain safe vehicle operation.
- Federal Signal power supplies and light heads are designed to work together as a system. Combining light heads and a power supply from different manufacturers may reduce the warning effectiveness of the lighting system and may damage the components. You should verify or test your combination to make sure the system works together and meets federal, state and local standards or guidelines.

*Electrical Hazards*

- A light system is a high current system. In order for the system to function properly, a separate negative (-) connection and positive (+) connection must be made. All negative connections should be connected to the negative battery terminal, and a suitable fuse should be installed on the positive battery terminal connection as close to the battery as possible. Ensure that all wires and fuses are rated correctly to handle the device and system amperage requirements.
- Never attempt to install aftermarket equipment that connects to the vehicle wiring, without reviewing a vehicle wiring diagram available from the vehicle manufacturer. Ensure that your installation will not affect vehicle operation or mandated safety functions or circuits. Always check the vehicle for proper operation after installation.

- The lighting system components, especially light bulbs, strobe tubes, LEDs and the outer housing get hot during operation. Be sure to disconnect power to the system and allow the system to cool down before handling any components of the system.
- DO NOT mount a radio antenna within 18 inches of the lighting system. Placing the antenna too close to the lighting system could cause the lighting system to malfunction or be damaged by strong radio fields. Mounting the antenna too close to the lighting system may also cause the radio noise emitted from the lighting system to interfere with the reception of the radio transmitter and reduce radio reception.
- DO NOT attempt to wash this or any other electrical device while it is connected to its power source. Exposure to liquid while the product is connected to the power source may result in an electrical shock and personal injury and may short circuit and damage the product.

**During Installation and Service**

- DO NOT get metal shavings inside the product. Metal shavings in the product can cause the system to fail. If drilling must be done near the unit, place an ESD approved cover over the unit. Inspect the unit after mounting to be sure there are no shavings in or near the unit.
- To avoid a battery explosion, always disconnect the negative battery cable first and reconnect it last. Avoid causing a spark when connecting near or to the battery. The gases produced by a battery can cause a battery explosion that could result in vehicle damage and serious injury.
- DO NOT connect this system to the vehicle battery until ALL other electrical connections are made, mounting of all components is complete, and you have verified that no shorts exist. If the wiring is shorted to the vehicle body or frame, high current conductors can cause hazardous sparks resulting in electrical fires or flying molten metal.
- DO NOT install equipment or route wiring (or the plug in cord) in the deployment path of an airbag.
- If a vehicle seat is temporarily removed, verify with the vehicle manufacturer if the seat needs to be recalibrated for proper airbag deployment.
- Before mounting any components, check the manual to be sure that the component you are installing is suitable for use in that area of the vehicle. Many components are not suitable for use in the engine compartment or other extreme environmental exposure areas.
- When drilling into a vehicle, ensure that both sides of the surface are clear of anything that could be damaged. All drilled holes should be deburred and all sharp edges should be smoothed. All wires going through drilled holes should be protected by a grommet or convolute/split-loom tubing. Additionally, all exterior drilled holes must be sealed with Motorcraft seam sealer T-A-2-B or equivalent to prevent the potential exposure to carbon monoxide or other potentially harmful fumes. Failure to observe this warning could cause serious injury or death.
- Because vehicle roof construction and driving conditions vary, do not drive a vehicle with a magnetically mounted warning light installed. The light could fly off the vehicle, causing injury or damage. Repair of damage incurred because of ignoring this warning shall be the sole responsibility of the user.

- To avoid denting the roof of the vehicle, place the light bar mounting feet as close to the outer edge of the roof as possible.
- Roof damage can occur if the hook adjustment bolts are over-tightened. Torque the adjustment bolts 6 ft-lb to 7 ft-lb. Install keeper plates.
- Locate the light system controls so the VEHICLE and CONTROLS can be operated safely under all driving conditions.

**After Installation or Service**

- After installation, test the light system to ensure that it is operating properly.
- If a seat is temporarily removed, verify with the vehicle manufacturer if the seat needs to be recalibrated for proper airbag deployment.
- Test all vehicle functions, including horn operation, vehicle safety functions, and vehicle light systems, to ensure proper operation. Ensure that the installation has not affected the vehicle operation or changed any vehicle safety function or circuit.
- Scratched or dull reflectors, mirrors, or lenses will reduce the effectiveness of the lighting system. Avoid heavy pressure and use of caustic or petroleum based products when cleaning the lighting system. Replace any optical components that may have been scratched or crazed during system installation.
- Do not attempt to activate or de-activate the light system control while driving in a hazardous situation.
- Frequently inspect the light system to ensure that it is operating properly and that it is securely attached to the vehicle.
- After installation and testing are complete, provide a copy of these instructions to instructional staff and all operating personnel.
- Do not use a pressure washer to clean the light bar. Failure to heed this notice will damage the light bar.
- File these instructions in a safe place and refer to them when maintaining and/or re-installing the product.

Failure to follow all safety precautions and instructions may result in property damage, serious injury, or death.

## Safety Messages to Operators of Federal Signal Sound/Light Systems

**⚠ WARNING**

People's lives depend on your safe operation of Federal Signal products. It is important to read and follow all instructions shipped with the products. Listed below are some other important safety instructions and precautions you should follow:

- Do not attempt to activate or de-activate the light system control while driving in a hazardous situation.
- Although your warning system is operating properly, it may not be completely effective. People may not see or heed your warning signal. You must recognize this fact and continue to drive cautiously.
- Situations may occur that obstruct your warning signal when natural and man-made objects are between your vehicle and others, such as raising your hood or trunk lid. If these situations occur, be especially careful.
- All effective sirens and horns produce loud sounds that may cause, in certain situations, permanent hearing loss. You and your passengers should consider taking appropriate safety precautions, such as wearing hearing protection.
- The effectiveness of an interior mounted warning light depends on the clarity, the tinting, and the angle of the glass it is being placed behind. Tinting, dirt defects, and steeply angled glass reduce the light output of the warning light. This may reduce the effectiveness of the light as a warning signal. If your vehicle has dirty, tinted, or steeply angled glass, use extra caution when driving your vehicle or blocking the right of way with your vehicle.
- To be an effective warning device, this product produces bright light that can be hazardous to your eyesight when viewed at a close range. Do not stare directly into this lighting product at a close range or permanent damage to your eyesight may occur.
- It is important that you fully understand how to safely operate this warning system before use.
- You should only operate your vehicle and the light/sound system in accordance with your department's Standard Operating Procedures.
- If a selected function does not perform properly or if any of the lamps remain illuminated when the control is off, disconnect the power connector from the control unit and contact the nearest service center.
- At the start of your shift, you should ensure that the entire warning light system and the siren system is securely attached and operating properly.
- Suction cup mounting is for temporary applications only. Window-mounted warning lights should be removed from the window and stored securely when not in use. Temperature changes and sunlight can cause suction cups to lose holding power. Periodically check the unit to enure that the suction cups have a firm grip on the mounting surface. An improperly secured light could fall off of the vehicle causing injury and damage.

- The holding power of magnetic mounting systems is dependent upon surface finish, surface flatness, and thickness of the steel mounting surface. Therefore, to promote proper magnetic mounting:
  - The mounting surface and the magnets must be kept clean, dry, and free of foreign particles that prevent good surface contact.
  - Ensure that mounting surface is flat.
  - A magnet mounting system should not be used on vehicles with vinyl tops.
  - To prevent sliding of the light assembly on the mounting surface, quick acceleration and hard stops should be avoided.

Failure to follow all safety precautions and instructions may result in property damage, serious injury, or death.

# Overview

The Allegiant™ light bar is a single-level LED light bar with ROC™ (Reliable On-Board Circuitry) and Solaris® LED technologies. ROC eliminates approximately 85 percent of potential failure points by incorporating a printed circuit board (PCB) in one assembly to substantially reduce the number of electrical connections. Solaris S2 LED modules use offset, complex reflector surfaces for accurate beam-shaping and the highest optical efficiency. The reflectors' overlapping, 360-degree lighting eliminates weak spots and provides off-axis warning around the light bar.

## LED Lights, Colors, and Flash Patterns

The microprocessor inside the light bar supplies three priority operational modes and a library of 27 flash patterns. To increase the safety of officers, pedestrians, and motorists, light bars larger than 21 inches long have standard front and rear cutoff, dimming, and intersection warning. The 21-inch light bar has dimming.

Multi-color heads are available with up to two different colored LEDs, eliminating the loss of primary warning colors in takedown, alley, and directional warning positions. Individual Allegiant light heads can flash between red, blue, amber, green, or white.

**NOTE:** The 21-inch light bar does not have directional or alley warning positions.

## Electrical System

The Allegiant light bar is protected against reversed polarity damage. The Allegiant light bar can be installed in any vehicle with a 12-volt negative-ground electrical system.

## Controller Options

Allegiant is configurable for Serial or Discrete control. Serial commands are controlled through the light bar CAT5 communication cable. The cable connects to Federal Signal Convergence network controllers, the Serial Interface Module (Part Number 8583446), the Federal Signal Six-Button Serial Controller, or the Federal Signal Three-Button Serial Controller.

With the Serial Interface Module, the Allegiant light bar can be activated by Federal Signal light bar controllers, SignalMaster™ directional light controllers, or by individual low-current switch boxes. Discrete bars larger than 21 inches send commands by a nine-conductor cable. The 21-inch light bar use a seven-conductor cable.

**⚠ WARNING**

***LOW LIGHT HAZARD: Enabling the Low Power function in the light bar may cause the light output to fall below certain current light output standards and guidelines for emergency warning lights. Use extreme caution when using this function. Ensure that the ambient light conditions are low enough that you are seen and that the reduction of glare from the light bar is safer than full light output in the situation. Failure to heed this warning may result in serious injury or death to you or others in your vicinity.***

## Ambient Light Sensor/AutoDim Option

Allegiant light bars larger than 21 inches can be ordered with an optional ambient light sensor. The sensor that detects the ambient light and automatically dims flashing lights during nighttime is located on the Passenger Inner ROC board. If used with a controller that has a dedicated dim button, the user has the option to temporarily override the dimming. For Serial bars, AutoDim is disabled in MODE 3 and is enabled when MODE 3 is removed. For Discrete bars, AutoDim is disabled in MODE 2.

Other advanced features of the Allegiant light bar include:

- A high degree of reliability through the use of advanced microprocessors and other integrated circuits.
- High output, long-life LEDs with no bulbs to change.

## Product Specifications

Operating and technical specifications for the Allegiant light bar are listed in this section by model.

**Table 1 Dimensions**

| Model | ALGT21 | ALGT45 | ALGT53 | ALGT61 | ALGT70 |
|---|---|---|---|---|---|
| Length | 20.7 in (52.6 cm) | 44.5 in (113.0 cm) | 52.7 in (133.9 cm) | 60.9 in (154.7 cm) | 69.1 in (175.5 cm) |
| Height | 1.8 in (4.6 cm) | 11.2 in (28.4 cm) | 11.2 in (28.4 cm) | 11.2 in (28.4 cm) | 11.2 in (28.4 cm) |
| Width | 11.2 in (28.4 cm) | 2.0 in (5.1 cm) | 2.0 in (5.1 cm) | 2.0 in (5.1 cm) | 2.0 in (5.1 cm) |
| Weight* | 10.0 Lb (4.536 kg) | 23.0 (10.4 kg) | 26.6 (12.1 kg) | 30.2 (13.7 kg) | 33.8 (15.3 kg) |

*with standard mounting feet

**Table 2 Light Specifications**

| Lighting Option | Current Draw | Lamp Technology | Reflector Style |
|---|---|---|---|
| LED (all heads) | 1.0 A in Steady-Burn Mode | High-brightness LED | Offset, compound curve, polished reflector |

**Table 3 Electrical and Temperature**

| Model | Electrical Potential | Current Draw (50% Flash Rate) | Operating Temp. |
|---|---|---|---|
| ALGT21 | 12.8 Vdc | 7.0 A | -40°F to 149°F (-40°C to 65°C) |
| ALGT45 | 12.8 Vdc | 9.0 A | -40°F to 149°F (-40°C to 65°C) |
| ALGT53 | 12.8 Vdc | 11.0 A | -40°F to 149°F (-40°C to 65°C) |
| ALGT61 | 12.8 Vdc | 13.0 A | -40°F to 149°F (-40°C to 65°C) |
| ALGT70 | 12.8 Vdc | 15.0 A | -40°F to 149°F (-40°C to 65°C) |

**Figure 1 Light Bar Positions**

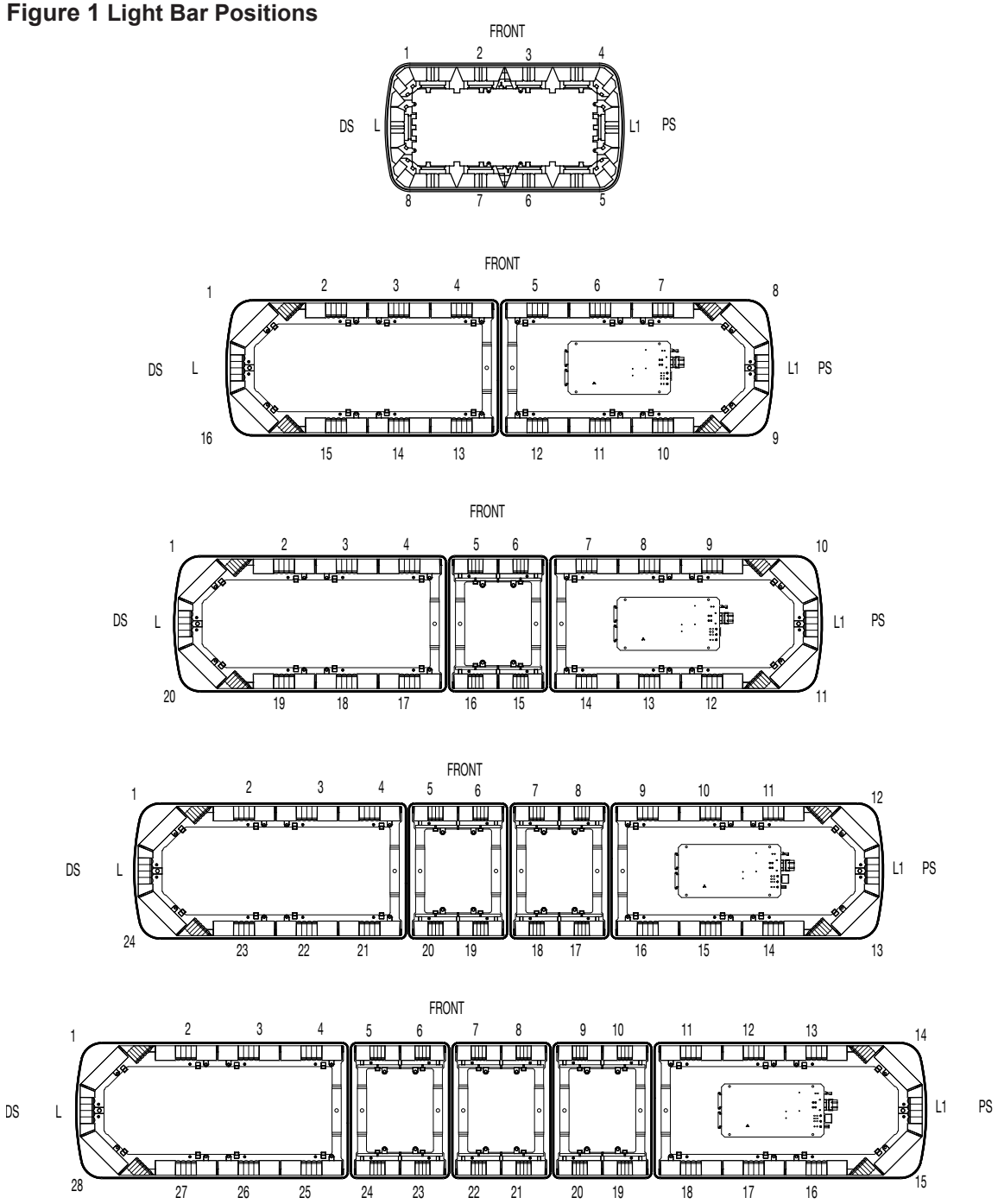

**Table 4 Light Bar functions**

| Command | 21-inch | 45-inch | 53-inch | 61-inch | 70-inch | Description |
|---|---|---|---|---|---|---|
| Left Alley | N/A | Default: L Cal-Style: L and 1 | Default: L Cal-Style: L and 1 | Default: L Cal-Style: L and 1 | Default: L Cal-Style: L and 1 | Steady burns white in the left alley heads |
| Right Alley | N/A | Default: L1 Cal-Style: L1 and 8 | Default: L1 Cal-Style: L1 and 10 | Default: L1 Cal-Style: L1 and 12 | Default: L1 Cal-Style: L1 and 14 | Steady burns white in the right alley heads |
| Scene front | N/A | Default: L, 1-8, and L1 Cal-Style: 2- 7 | Default: L, 1-10, L1 Cal-Style: 2-9 | Default: L, 1-12, L1 Cal-Style: 2-11 | Default: L, 1-14, L1 Cal-Style: 2-13 | Floods white to the front of the light bar. This option changes depending on how alleys are configured |
| Worklight | 6, 7 | 9-16 | 11-20 | 13-24 | 15-28 | Floods white to the rear of the light bar |
| Takedown | 2, 3 (Serial and Discrete) | *Positions are configured (Serial Only) | *Positions are configured (Serial Only) | *Positions are configured (Serial Only) | *Positions are configured (Serial Only) | Steady burns white in the configured takedown positions (Serial Only) |
| Steady Red (Serial with SSP or Serial In-terface Only) | N/A | 3 and 6 | 3 and 8 | 3 and 10 | 3 and 12 | Steady burns the heads If red in DS and red or blue in PS, it will steady burn |
| SignalMaster (Serial Only) | N/A | 10-15 | 12-19 | 15-22 | 18-25 | Flashes SignalMaster |

# Reprogramming the Light Bar

**⚠ WARNING**

***HEAVY OBJECT: Use lifting aids and proper lifting techniques when removing or replacing this product. Failure to heed this warning may cause personal injury.***

Carefully unpack the light bar assembly and any other products included in the shipment. Inspect them for damage that may have occurred during shipping. If a product has been damaged, do not install or operate it. Immediately file a claim with the carrier describing the damage.

Carefully check all envelopes, shipping labels, and tags before removing or destroying them. If you are missing any parts, contact Customer Support at 1-800-264-3578, 7 A.M to 5 P.M., Monday through Friday (CT).

## Reprogramming the Light Bar

Although the Allegiant light bar is configured and programmed at the factory, you may want change default settings and flash patterns before you install the light bar. Before you begin, decide if you want to change these default settings:

### Serial Bars

#### *MODE 1, 2, 3, and INTERSECTION*

MODES 1 through 3 are most often selected by a progressive slide switch, which enables the driver to turn on the light bar without looking down. You can select a pattern for each mode from the light bar's library of 27 patterns.

The INTERSECTẾN flash pattern is typically a high activity pattern that attracts attention to the vehicle as it approaches an intersection. You can select a pattern from the library and choose one of three ways to turn on and off the pattern. The INTERSECTẾN flash pattern overrides the three priority modes.

**NOTE:** In light bars larger than 21 inches, if the SignalMaster flash pattern is turned on, it overrides the current flash pattern.

#### *FRONT and REAR lights: CUTOFF (default) or ENABLE (Light bars larger than 21 inches)*

Set these options after you change the default settings for MODE and INTERSECTẾN flash patterns.

CUTOFF turns OFF the front or rear LEDs when 12 Vdc is applied to the FRONT or REAR light control wire. ENABLE turns ON the front or rear LEDs when 12 Vdc is applied.

### Discrete Bars

#### *MODE 1, 2 (Light bars 45 inches and larger)*

You can select a pattern for each mode from the light bar's library of 27 patterns.

***Color 1, 2, 1 & 2 (21-inch light bar)***

You can select a pattern for all color modes from the light bar's library of 27 patterns.

## Making the Electrical Connections for Reprogramming

To supply power to the light bar, use a fully-charged 12-volt automotive battery. For Serial bars, follow the instructions supplied with external controller. For SSP, use 25500151; Serial Interface, use 2562248; six-button, 2562360 and 2562669; three-button, 2562497.

For Discrete, follow these steps:

1. Place the light bar on a sturdy, flat surface.
2. Attach the Black wire to the negative battery (–GND) terminal.
3. Attach the Red and/or Yellow power line through a fuse rated on Table 5 to the positive battery (+BAT) terminal. If a switch is desired, attach the switch between the fuse and the battery.

**Table 5 Wire functions and fuse requirements**

**45-inch and longer Allegiant**

| Wire Color | Fuse | Function |
|---|---|---|
| Red | 20 A | Front Mode 1 |
| Yellow | 20 A | Rear Mode 1 |
| Blue | 12 A | Worklight/Bed Light |
| Orange | 12 A | Scene Front |
| Gray | 5 A | Right Alley |
| Green | 5 A | Left Alley |
| Brown | N/A | Mode 2 Override |
| Brown/White | N/A | Dimming |
| Black | N/A | Ground |

**21-inch Allegiant**

| Wire Color | Fuse | Function |
|---|---|---|
| Red | 10 A | Color 1 |
| Brown | 10 A | Color 2 |
| Blue | 5 A | Bed Light |
| Violet | 5 A | Worklight |
| Orange | 5 A | Takedown |
| Green | N/A | Dimming/Pattern Series |
| Black | N/A | Ground |

## Reprogramming the Discrete Light Bar—45 inches or Larger

The discrete light bar can change the flash pattern for Modes 1 and 2. To change the flash pattern:

1. Attach the Black wire to the negative battery (-GND) terminal.
2. Apply +BAT to the Red and/or Yellow wire to turn on the light bar. If Mode 2 is being changed, apply +BAT to the Brown wire as well.
3. Quickly tap the Brown/White wire to +BAT three times.
4. Tap the Brown/White wire once to change to the next pattern. The pattern will be dimmed while the Brown/White wire is held to +BAT.
5. Repeat step 4 until the desired pattern is selected.
6. Turn the light bar off. Wait at least 5 seconds and turn the light bar on. Verify that the pattern has been saved.

## Reprogramming the Discrete Light Bar—21 inches

The discrete light bar can change the flash pattern for Color 1 and 2. To change the flash pattern:

1. Attach the Black wire to the negative battery (-GND) terminal.
2. Apply +BAT to the Red and/or Brown wire to turn on the light bar.
3. Quickly tap the Green wire to +BAT three times.
4. Tap the Green wire once to change to the next pattern. The pattern will be dimmed while the Green wire is held to +BAT. The flash pattern for all color modes advances simultaneously.
5. Repeat step 4 until the desired pattern is selected.
6. Turn the light bar off. Wait at least 5 seconds and turn the light bar on. Verify that the pattern has been saved.

Mode 1 flash patterns are listed in Table 6.

Mode 2 enables flashing white to the front by default. It can be reprogrammed to a different flash pattern with OR without flashing white. See Table 7 for the pattern list for Mode 2.

## DIP Switch

For discrete bars and serial bars NOT using the ignition wire (control head powered from light bar), DIP switch 1 on all bars 45 inches or larger should be in the ON position. For 21-inch bars, DIP switch 2 should be in the ON position.

For serial bars using the ignition wire (control head powered from vehicle), DIP switch 1 on all bars 45 inches or larger should be in the OFF position. For 21-inch bars, DIP switch 2 should be in the OFF position.

**Table 6 Allegiant Flash Patterns (45 inches and larger)**

| # | Description | # | Description | # | Description |
|---|---|---|---|---|---|
| 1 | Pattern 1* | 11 | Pattern 11 | 21 | Pattern 21 |
| 2 | Pattern 2* | 12 | Pattern 12 | 22 | Pattern 22 |
| 3 | Pattern 3* | 13 | Pattern 13 | 23 | Pattern 23 |
| 4 | Pattern 4* | 14 | Pattern 14 | 24 | Pattern 24 |
| 5 | Pattern 5* | 15 | Pattern 15 | 25 | Pattern 25* |
| 6 | Pattern 6* | 16 | Pattern 16 | 26 | Pattern 26 |
| 7 | Pattern 7 | 17 | Pattern 17 | 27 | Pattern 27 |
| 8 | Pattern 8* | 18 | Pattern 18 | 28 | Steady On |
| 9 | Pattern 9 | 19 | Pattern 19 | | |
| 10 | Pattern 10 | 20 | Pattern 20 | | |

*Conforms to California Title 13.

**Table 7 Allegiant Discrete Mode 2 Flash Patterns (45 inches and larger)**

| # | Description | # | Description | # | Description |
|---|---|---|---|---|---|
| 1 | Pattern 1* | 21 | Pattern 11 | 41 | Pattern 21 |
| 2 | Pattern 1 + Flash WHT front* | 22 | Pattern 11 + Flash WHT front | 42 | Pattern 21 + Flash WHT front |
| 3 | Pattern 2* | 23 | Pattern 12 | 43 | Pattern 22 |
| 4 | Pattern 2 + Flash WHT front* | 24 | Pattern 12 + Flash WHT front | 44 | Pattern 22 + Flash WHT front |
| 5 | Pattern 3* | 25 | Pattern 13 | 45 | Pattern 23 |
| 6 | Pattern 3 + Flash WHT front* | 26 | Pattern 13 + Flash WHT front | 46 | Pattern 23 + Flash WHT front |
| 7 | Pattern 4* | 27 | Pattern 14 | 47 | Pattern 24 |
| 8 | Pattern 4 + Flash WHT front* | 28 | Pattern 14 + Flash WHT front | 48 | Pattern 24 + Flash WHT front |
| 9 | Pattern 5* | 29 | Pattern 15 | 49 | Pattern 25* |
| 10 | Pattern 5 + Flash WHT front* | 30 | Pattern 15 + Flash WHT front | 50 | Pattern 25 + Flash WHT front* |
| 11 | Pattern 6* | 31 | Pattern 16 | 51 | Pattern 26 |
| 12 | Pattern 6 + Flash WHT front* | 32 | Pattern 16 + Flash WHT front | 52 | Pattern 26 + Flash WHT front |
| 13 | Pattern 7 | 33 | Pattern 17 | 53 | Pattern 27 |
| 14 | Pattern 7 + Flash WHT front | 34 | Pattern 17 + Flash WHT front | 54 | Pattern 27 + Flash WHT front |
| 15 | Pattern 8* | 35 | Pattern 18 | 55 | Steady On |
| 16 | Pattern 8 + Flash WHT front* | 36 | Pattern 18 + Flash WHT front | 56 | Steady On + Flash WHT front |
| 17 | Pattern 9 | 37 | Pattern 19 | | |
| 18 | Pattern 9 + Flash WHT front | 38 | Pattern 19 + Flash WHT front | | |
| 19 | Pattern 10 | 39 | Pattern 20 | | |
| 20 | Pattern 10 + Flash WHT front | 40 | Pattern 20 + Flash WHT front | | |

*Conforms to California Title 13.

**Table 5 21-inch Allegiant Flash Patterns**

| # | Description | Flashes per Minute |
|---|---|---|
| 1 | Split - Quad/Double | 164/50 |
| 2 | Full - Single | 67 |
| 3 | Split - Single | 48 |
| 4 | Full - Sextuple | 75 |
| 5 | Split/Full - Octa/Single | 60/160 |
| 6 | Split - Single | 120 |
| 7 | Split - Quad | 75 |
| 8 | Split - Single | 110 |
| 9 | Split - Single | 188 |
| 10 | Split - Double Fedpulse | 67 |
| 11 | Split - Quad | 150 |
| 12 | Full - Single | 75 |
| 13 | Split - Single/Quad | 200/94 |
| 14 | Split - Quad | 50 |
| 15 | Split - Sextuple | 67 |
| 16 | Split - Double | 150 |
| 17 | Full - Long Accelerating | 60 |
| 18 | Full - Delerating | 60 |
| 19 | Split - Quint | 84 |
| 20 | Split/Full - Chopped Quad/Double | 85/75 |
| 21 | Split/Full - Chopped Double/Double | 76/75 |
| 22 | Split/Full - Quad/Single | 60/300 |
| 23 | Full - Short Accelerating | 35 |
| 24 | Split - Single/Quad | 150/50 |
| 25 | Random | |
| 26 | Split - Breathing | 60 |
| 27 | Split/Full - Double/Quad | 100/92 |
| 28 | Steady Burn | |

**⚠ WARNING**

***LOW LIGHT HAZARD: Enabling the Low Power function in the light bar may cause the light output to fall below certain current light output standards and guidelines for emergency warning lights. Use extreme caution when using this function. Ensure that the ambient light conditions are low enough that you are seen and that the reduction of glare from the light bar is safer than full light output in the situation. Failure to heed this warning may result in serious injury or death to you or others in your vicinity.***

# Wiring the Allegiant Light Bar

Before proceeding, ensure that the light bar has been installed on the vehicle roof in accordance with the instructions included with the mounting kit. Depending on the type of vehicle and mounting system feature, there are two options available for installing the light bar to the roof of the vehicle: hook-on mounting or permanent mounting.

**⚠ WARNING**

***INSTALLATION PRECAUTION: Do not mount a radio antenna within 18 inches of the lighting system. Placing the antenna too close to the lighting system could cause the lighting system to malfunction or be damaged by strong radio fields. Mounting the antenna too close to the lighting system may also cause the radio noise emitted from the lighting system to interfere with the reception of the radio transmitter and reduce radio reception.***

## Planning the Electrical Installation

The light bar is completely wired at the factory and does not require any additional internal wiring. All the conductors necessary for control of any and all basic and optional functions are contained in the CAT5 cable (Serial) or the 9 conductor cable (Discrete). The basic light functions of the Allegiant must be controlled by a Federal Signal Convergence network controller (Serial) or appropriately rated switches (Discrete).

To prevent damage to the light bar and vehicle and ensure that all equipment operates properly, carefully plan where to mount and wire the light bar and controlling equipment:

1. Verify that the light bar and mounting hardware fit the vehicle.
2. Determine where to mount the light bar on the vehicle.
3. Determine where to mount the controlling equipment:
   - Trunk or remote location
   - Console

**⚠ WARNING**

***AIRBAG DEPLOYMENT: Do not install equipment or route wiring in the deployment path of an airbag. Failure to observe this warning will reduce the effectiveness of the airbag or potentially dislodge the equipment, causing serious injury or death.***

4. Decide where to route wiring around airbag areas.
5. Decide where to route the light bar power and ground wires.
6. To make wiring easier, remove the seats and spare tire, and pull down the headliner where needed.

7. Separate all electronic equipment wiring from two-way radio equipment wiring.
8. To avoid interference, keep two-way radio antennas a minimum of 18 inches (45.7 cm) away from warning equipment.
9. Whenever possible, run full wire lengths. DO NOT splice the wires.
10. Do not coil excess wire. Leave a drain loop for servicing.

**⚠ WARNING**

***DRILLING PRECAUTIONS: Before drilling holes, check the area into which you plan to drill to ensure that you do not damage vehicle components. All drilled holes should be deburred and all sharp edges should be smoothed. Additionally, all exterior drilled holes must be sealed with Motorcraft seam sealer T-A-2-B or equivalent to prevent the potential exposure to carbon monoxide or other potentially harmful fumes. Failure to observe this warning could cause serious injury or death.***

11. When you frame-ground the equipment, use the manufacturer-supplied ground locations in the vehicle.

**IMPORTANT:** After the installation, frequently inspect the light bar and mounting feet to ensure that all fasteners and brackets are tight.

## Connecting Power to the Light Bar

**NOTE:** Plan the location of the wire-routing hole in the vehicle roof so that the power and communication cables do not have tight bends and have some slack to ease removal.

**⚠ WARNING**

***BATTERY EXPLOSION: To avoid a battery explosion, always disconnect the negative battery cable first and reconnect it last. Avoid causing a spark when connecting near or to the battery. The gases produced by a battery can cause a battery explosion that could result in vehicle damage and serious injury.***

**⚠ WARNING**

***SEAT REMOVAL PRECAUTION: If a vehicle seat is temporarily removed, verify with the vehicle manufacturer if the seat needs to be recalibrated for proper airbag deployment. Failure to follow this warning cause serious injury or death.***

***NOTICE***

***REVERSE POLARITY / MISWIRING: Reverse polarity or incorrect voltage may damage the light. To avoid damage to the light, ensure that the battery voltage is the same as the voltage rating of the light and that the correct polarity is observed. If you are connecting to a cigarette lighter plug or 12 V outlet, connect the positive wire to the center terminal and connect the negative wire to the outer terminal.***

To make the power connections on a Discrete:

1. Ensure that the lines are adequately fused as shown in Table 5 Wire functions and fuse requirements on page 15.
2. Attach the Black wire to the negative battery (–GND) terminal. See Table 5.
3. Attach each power line through a fuse rated on Figure 2 to the positive battery (+BAT) terminal. If a switch is desired, attach the switch between the fuse and the product.

To make the power connections on a Serial Interface:

1. Ensure that the lines are adequately fused as shown in Figure 2.
2. From the light bar, route the CAT5 control cable into the vehicle cab or trunk near the eventual location of the Serial Interface Module. An input cable is also provided with the Interface Module.
3. Route and connect the Black lead from the light bar to the vehicle battery's ground
(–GND) terminal.
4. Route and connect the Red lead from the light bar through a 40 A Maxi fuse at the source, which is the positive battery terminal (+BAT).

**Figure 2 Power and cable connections**

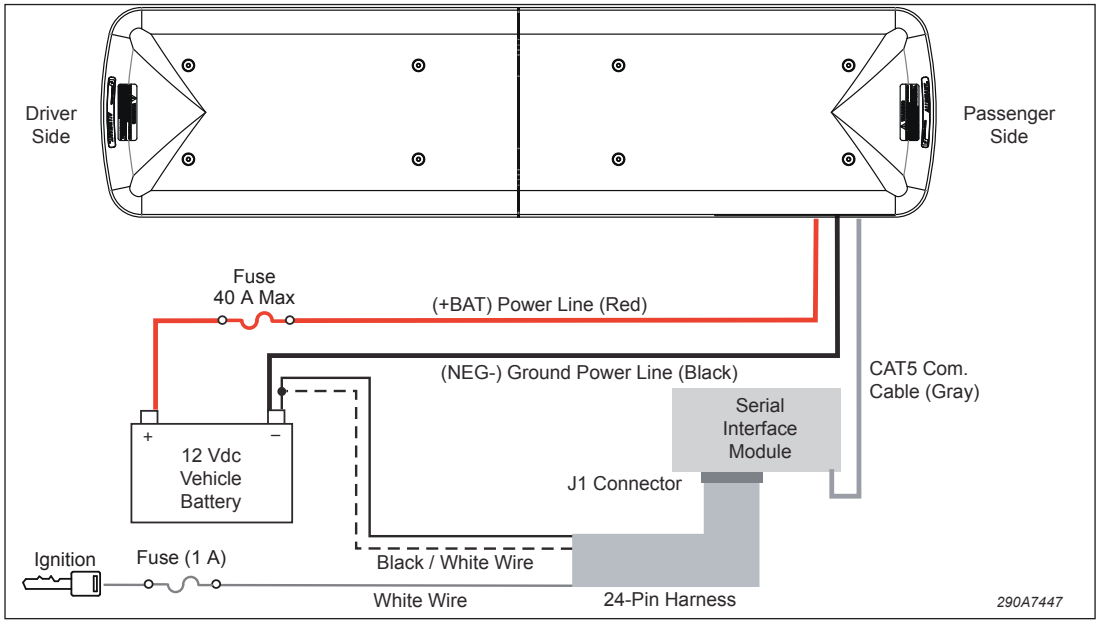


**NOTE:** Powering multiple devices with a common control wire may cause one or more devices to briefly remain functional after signal power is removed. For example, due to the high input filter capacitance, a strobe supply can briefly supply the current required to signal a light bar function to remain on. If necessary, use a relay to isolate devices with large filter capacitors (Figure 2). All components/wires are user-supplied.

**⚠ WARNING**

***SHOCK HAZARD: Strobe and HID light systems generate high voltages. Disconnect power from the system and wait at least 5 minutes before opening the unit. Do not apply power to the unit while the unit is open. Failure to follow this warning could result in serious injury or death.***

**Figure 3 Relay for isolating devices with large filter capacitors**

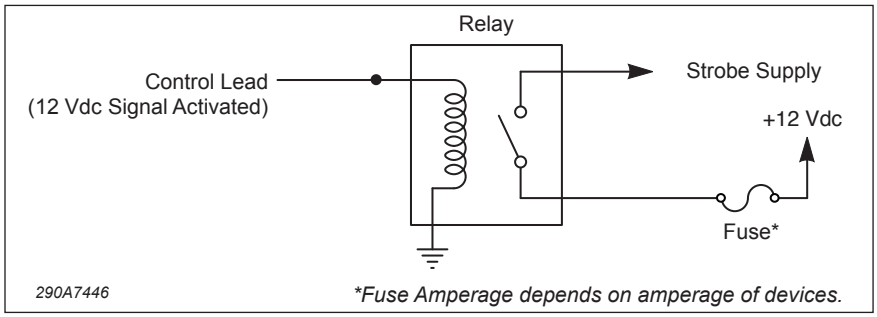


### *Internal SignalMaster (Factory Default)*

Internal operation uses the light bar's built-in SignalMaster controller to generate directional warning patterns. With internal operation, an external SignalMaster controller is not needed. A standard low-current switch box can activate the light bar's internal SignalMaster controller. To activate the light bar's internal SignalMaster controller, apply 12 Vdc (+BAT) to the SignalMaster control wires. See Table 8.

**NOTE:** This feature does not apply to the 21-inch light bar.

**Table 8 SignalMaster control wires and warning patters (Internal SM control)**

| Warning Pattern | Control Wires | Description (with 8-head example) |
|---|---|---|
| LEFT | Red | Rear LEDs flash from right to left<br>8 \| 7 \| 6 \| 5 \| 4 \| 3 \| 2 \| 1 |
| CENTER OUT | Green | Rear LEDs flash from center out to both sides<br>4 \| 3 \| 2 \| 1 \| 1 \| 2 \| 3 \| 4 |
| RIGHT | Green/Black/White | Rear LEDs flash from left to right<br>1 \| 2 \| 3 \| 4 \| 5 \| 6 \| 7 \| 8 |
| WARN 1 | Orange/Green | Outer LEDs alternate<br>1 \|  \|  \|  \|  \|  \|  \| 2 |
| WARN 2 | Orange | Two outer LEDs alternate<br>1 \| 1 \|  \|  \|  \|  \| 2 \| 2 |
| WARN 3 | Blue/Red | Right four LEDs alternate with left four LEDs<br>1 \| 1 \| 1 \| 1 \| 2 \| 2 \| 2 \| 2 |
| WARN 4 | Red/Green | Two outer LEDs flash, then the four LEDs between the inner/outer LEDs flash<br>1 \| 1 \| 2 \| 2 \| 2 \| 2 \| 1 \| 1 |
| FAST | White/Red | Operates the selected pattern 50 percent faster |

### *External SignalMaster*

External operation uses the Serial Interface Module to drive each SignalMaster directional warning head independently through an external Federal Signal SignalMaster controller or SS2000SM series siren (Figures 4 through 7). Either device provides an independent ground signal to turn on each head. To cross reference external SignalMaster wiring to a Federal Signal controller or the SM2000SM series siren, see Table 9.

**NOTE:** This feature does not apply to the 21-inch light bar.

**Table 9 Cross reference for controller leads (external Serial Interface Module control)**

| 24-Pin Harness from the Serial Interface Module | SignalMaster* Wire (Figure 4) | SS2000SM* Wire (Figure 5) |
|---|---|---|
| Red | White | White (1) |
| Green | Brown | Brown (2) |
| Green/Black/White | Green | Green (3) |
| Orange/Green | Orange | Orange (4) |
| Orange | Purple | Purple (5) |
| Blue/Red | Gray | Gray (6) |
| Red/Green | Yellow | Yellow (7) |
| White/Red | Blue | Blue (8) |

*Wire colors as described in the controller's installation instructions.

**Figure 4 SignalMaster 331105 controller (external SignalMaster control)**

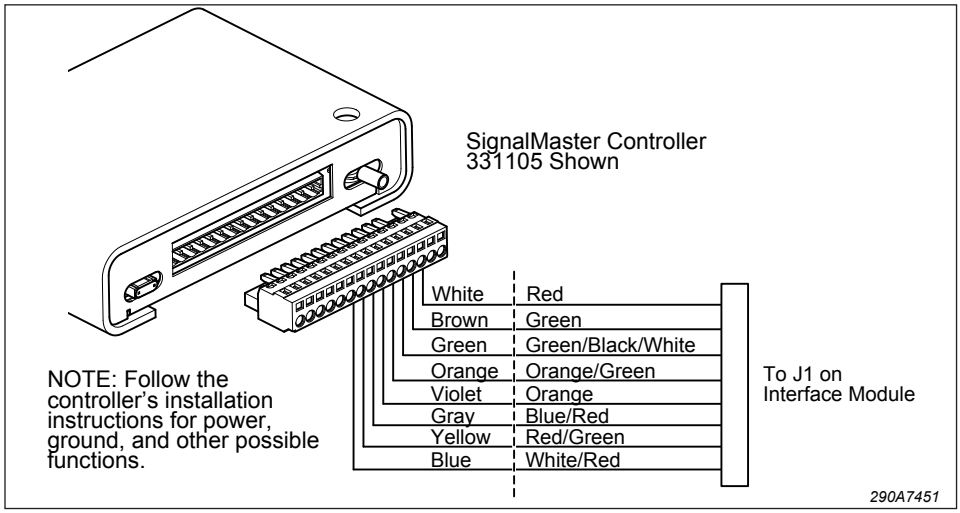

**Figure 5 SmartSiren® SS2000SM Series controller (external SignalMaster control)**

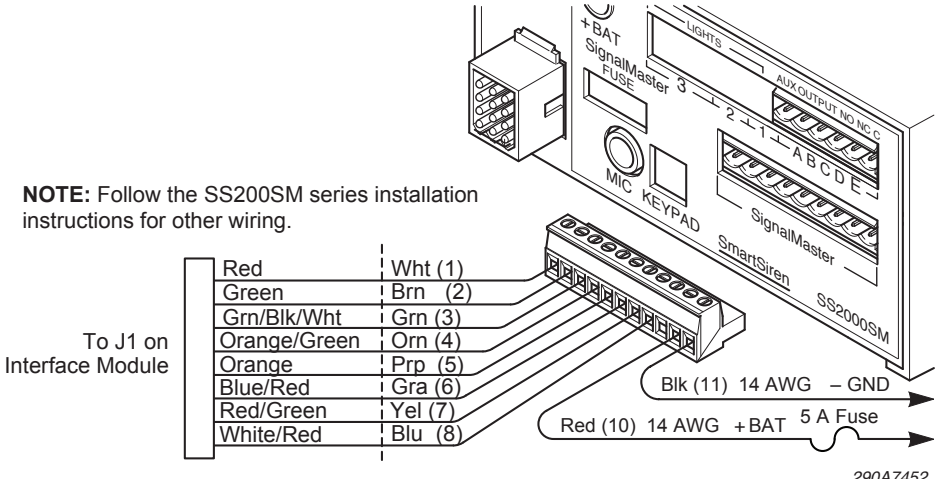

**Figure 6 SignalMaster control functions wired to ground for external Serial Interface Module control**

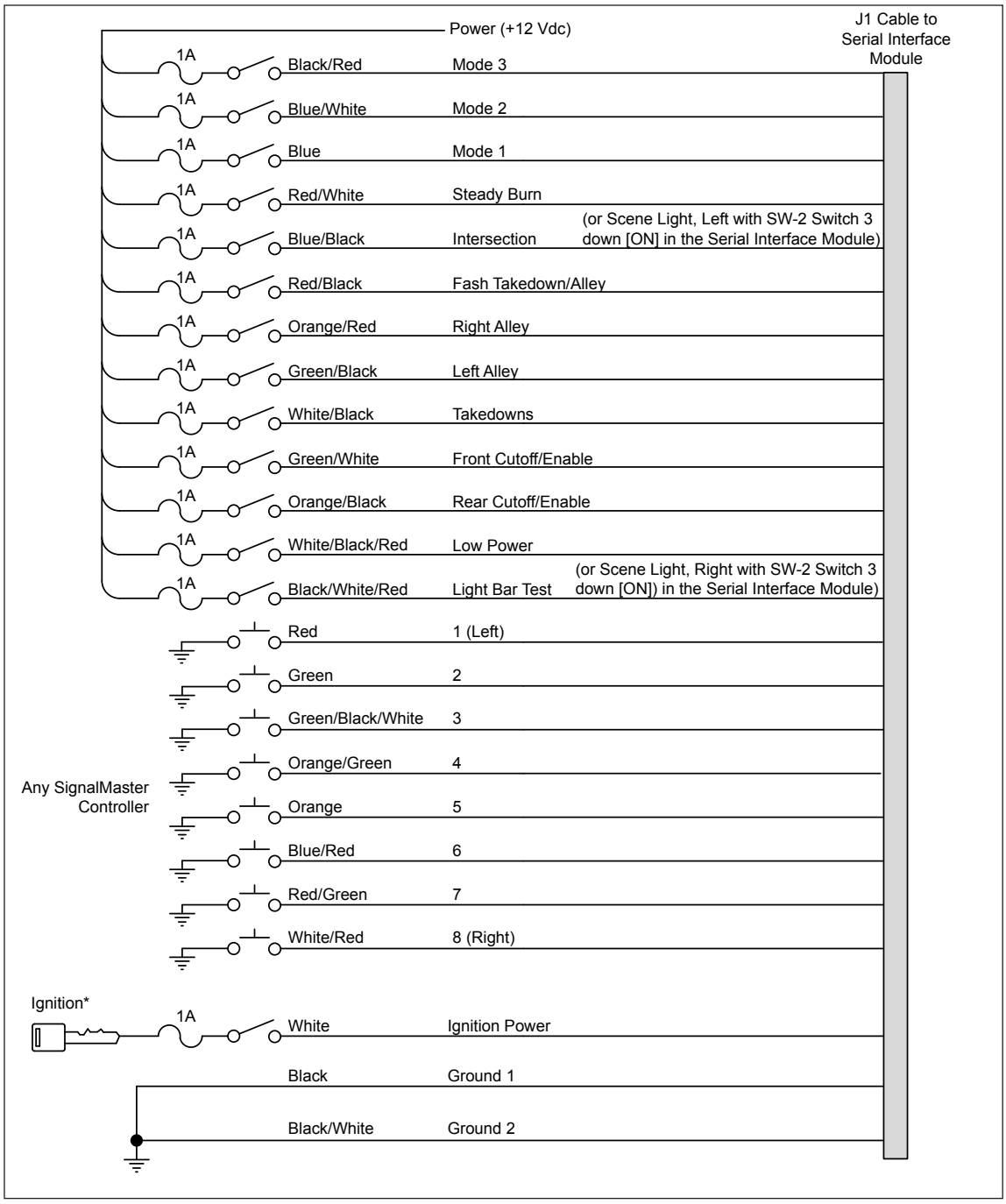

**Figure 7 SignalMaster control functions wired to 12 Vdc for Internal control**

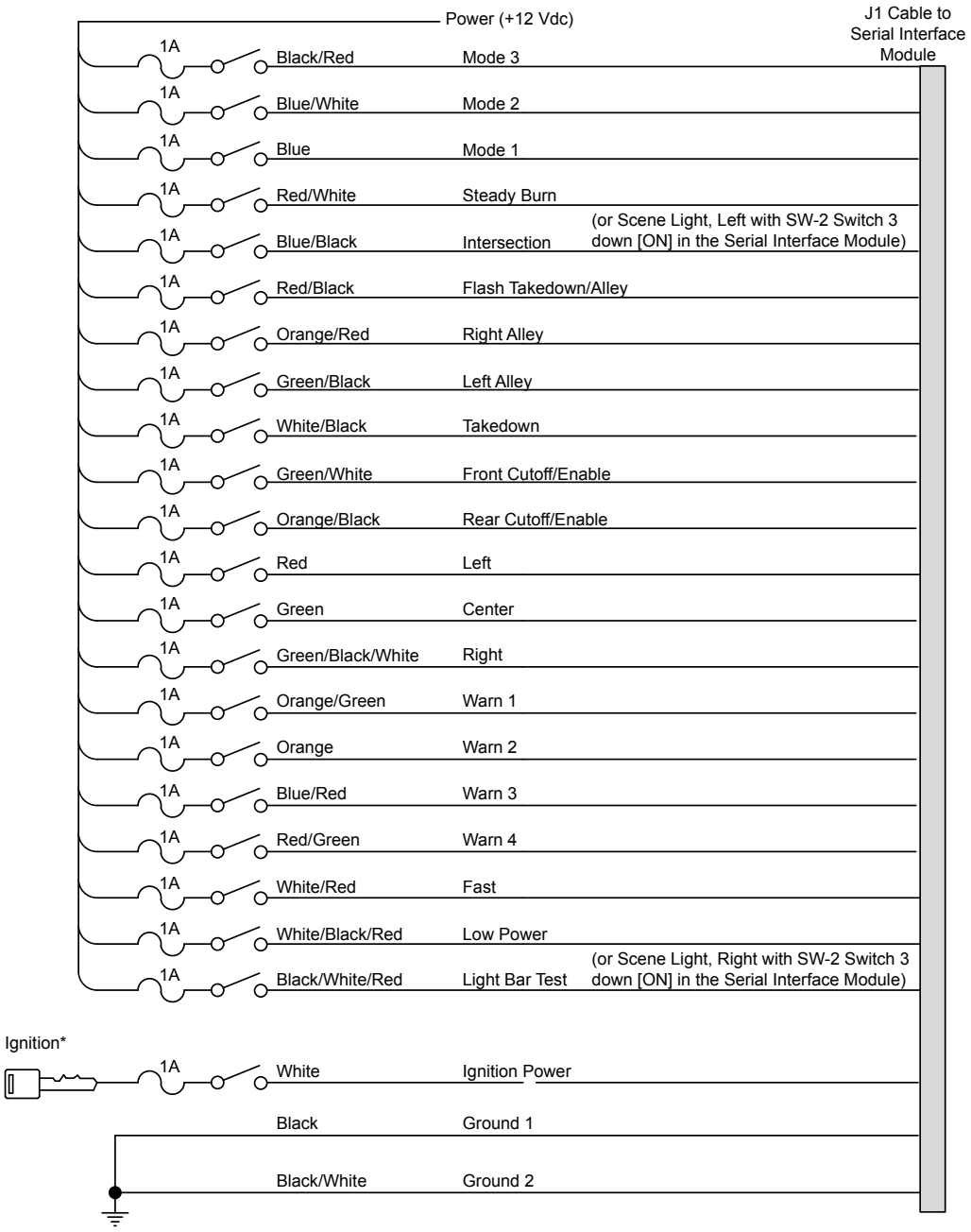

# Maintaining and Servicing the Allegiant

**⚠ WARNING**

***SHOCK HAZARD: Disconnect ALL power to the light bar before any maintenance is performed. Failure to do so may result in property damage, serious injury, or death.***

**⚠ WARNING**

***BURN HAZARD: After prolonged operation, the unit gets hot and can cause burns. Do not touch the unit while or shortly after it has been operating. Always allow the unit to cool before handling it.***

**⚠ WARNING**

***HEAVY OBJECT: Use lifting aids and proper lifting techniques when removing or replacing this product. Failure to follow this warning may cause personal injury.***

This chapter describes how to maintain and service the Allegiant light bar. Establishing a regular maintenance and inspection schedule extends the life of the light bar and ensures safety. For service, support, or replacement parts, contact the Federal Signal Service Department at 1-800-433-9132, 7 A.M. to 5 P.M., Monday through Friday (CT). For replacement parts and part numbers, see Table 10 on page 35.

## Servicing the Light Bar Domes

Servicing the light bar domes includes removing them and inspecting their seals and hardware to ensure that the domes remain secure and watertight. Inspection also involves checking the domes for cracks, crazing (hairline cracks) and other defects.

### Cleaning the Light Bar Lens or Dome

***NOTICE***

***CRAZING/CLEANING SOLUTIONS: The use of cleaning solutions, such as strong detergents, solvents, and petroleum products, can cause crazing (cracking) of the light bar lens and reflectors. To clean the reflectors, use a soft, damp cloth. To clean the lens, use a soft cloth and a solution of water and a mild detergent.***

**⚠ WARNING**

***CRAZING/CHEMICALS: Crazed, cracked or faded lenses or reflectors reduce the light output and the effectiveness of the lighting system. A lens or reflectors showing this type of aging must be replaced. Failure to follow this warning may result in bodily injury or death.***

**NOTICE**

***EQUIPMENT DAMAGE: Do not use a pressure washer to clean the light bar. Failure to heed this notice will damage the light bar.***

To clean the light bar lens or dome:

1. Rinse with lukewarm water to loosen dirt and debris.
2. Use a mild detergent, lukewarm water, and a soft cloth to gently clean the lens. To avoid damaging the finish, do not use heavy pressure or caustic, abrasive, or petroleum-based cleaners.
3. Rinse and dry with a soft cloth to prevent water spotting.
4. To remove fine scratches and haze, use a soft cloth and a high quality automotive paste cleaner/wax that is non-abrasive.

## Removing and Reinstalling the Light Bar Dome

The dome covers the ROC (Reliable Onboard Circuitry) PCBs and controller PCB.

Tool required:

- T27 Torx driver

### *Removing the Lens*

**Figure 8 Four barrel nuts in passenger-side end dome**

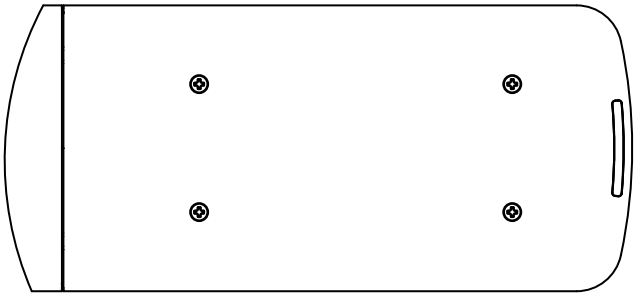

*290A5984*

To remove the lens:

1. Disconnect all power to the light bar at the battery.
2. Use a T27 Torx driver to remove the 1/4"-20 Torx-head barrel nuts securing the dome (Figure 8). Carefully remove the dome. Avoid damaging the lip seal.
3. Verify that an O-ring is under the head of each barrel nut and not stuck to the dome. Use a wooden or plastic pick to carefully remove the O-rings from the dome to prevent damaging them.
4. Inspect the O-rings and the lip seal for deformation, brittleness, cuts, or tears. To maintain water tightness, replace a questionable O-ring or seal.

5. Inspect the dome for cracks, crazing (hairline cracks) and other defects.

### *Reinstalling the Dome*

To reinstall the dome:

1. Reinstall the dome. To prevent cross-threading the barrel nuts, back them counterclockwise until you hear the click of the threads engaging.
2. Tighten the barrel nuts to 16-24 in-lb.

## Replacing a PCB

The Allegiant 45 light bar has two end and two intermediate ROC PCBs as well as a controller PCB (Figure 9). The 53, 61, and 70 bars also have center ROC PCBs. They are configured at the factory per the customer order. The end and intermediate ROC PCBs snap onto a common reflector.

The 21-inch Allegiant light bar has a single ROC board set. This set is configured at the factory per customer order.

**NOTICE**

***STATIC SENSITIVE DEVICE: This light bar circuitry can be damaged by electrostatic discharge (ESD). Follow anti-static procedures when servicing this light bar.***

**Figure 9 Locations of ROC PCBs (53-inch light bar shown)**

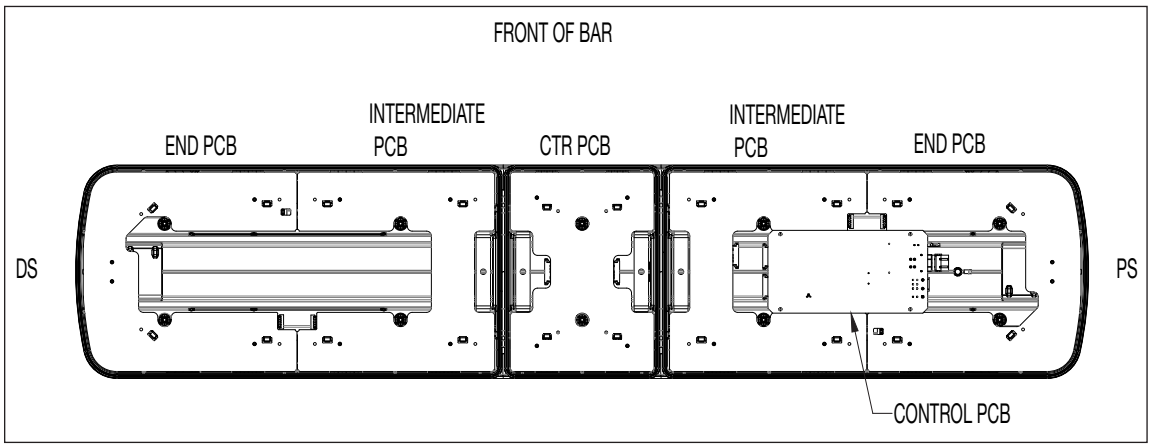

**Figure 10 ROC Connections**

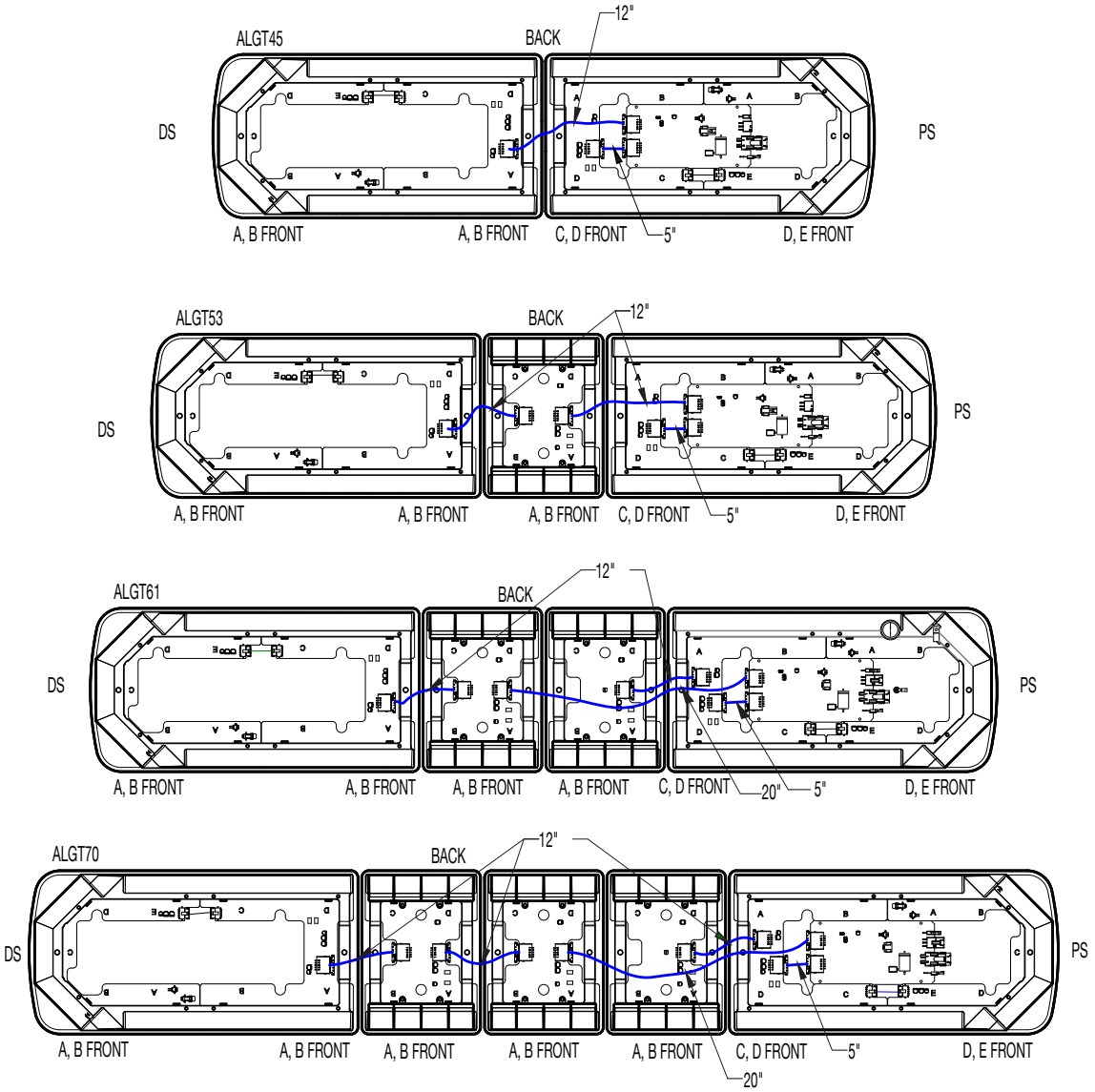


Tool required:

- T27 Torx driver

To remove a PCB:

1. Disconnect all power to the light bar.
2. Remove the dome as described previously.
3. Note and record the connection to the PCB, and then lift the assembly and disconnect the harnesses.
4. Remove the assembly from the light bar.
5. For ROC PCBs, gently release the snap tabs securing the PCB to the reflector.

### *Reinstalling a PCB*

To reinstall a PCB:

For ROC PCBs, gently snap the PCB to the reflector.

1. ROC boards must be connected as shown in Figure 10 to avoid overloading a single connector. Install the assembly to the light bar and reconnect the harnesses.
2. Reinstall the dome. To prevent cross-threading the barrel nuts, back them counterclockwise until you hear the click of the threads engaging, then tighten them to 16-24 in-lb.
3. Reconnect power to the light bar.

## Resetting the Controller

These instructions explain how to reset the Allegiant light bar after you install a service replacement board or if the light heads operate erratically. For the light bar to operate correctly, the controller stores information about which LED colors it controls. Resetting the light bar controller may be necessary if you replace the controller board or if the LEDs flash erratically. To scan the colors that are available at the end of the reset cycle, the controller briefly flashes all LEDs simultaneously.

Be sure to perform the reset cycle on a vehicle with a well-charged battery. Failure to do so may cause the light bar to flash or operate incorrectly.

The 21-inch Allegiant light bar has an integrated controller board and does not ever need to rescan.

To reset the controller:

1. Remove the barrel nuts and lens from the light bar. (See Removing and Reinstalling the Light Bar Lens on page 28.)

**NOTE**: If you are replacing the controller, ensure that power to the light bar is off, and then disconnect all connectors to the controller. Install the new controller and re-connect all cables to the controller board.

2. Connect the ROC board connectors to the controller.
3. Connect the Power and GND cables to the controller.
4. Connect the STT Cable to the controller if needed.

### For Serial Models

5. Connect the CAT5 Cable to the controller.

### For Discrete Models

5. Connect the 6-pin and 2-pin cables to the controller.

**NOTE**: Do not connect both discrete and CAT5 cables at the same time.

6. Verify that the light bar is working.

## Troubleshooting the Light Bar

This section provides troubleshooting assistance for common problems. If you have any questions left unanswered, call the Federal Signal Service Department at 1-800-433-9132, 7 a.m. to 5 p.m., Monday through Friday (CT).

**Table 10 Troubleshooting tips**

| Problem | Corrective Action |
|---|---|
| The light bar does not light | • Verify that the light bar's Red power line (+BAT) and the Black ground-power line (–GND) are properly connected to a good, fully charged 12-volt battery. Check the 40 A fuse.<br>• Ensure that the ground connection from the light bar controller to the aluminum extrusion is good.<br>• Verify that the CAT5 cable is connected to the Serial Interface Module (J1) and there are no damaged pins in the sockets.<br>• Try a new CAT5 cable.<br>• Check the connections on the Serial Interface Module:<br>  • The Black wire and the Black/White wire are connected to ground (–GND)<br>  • The White wire is connected to 12 Vdc. Check the 1 A fuse.<br>  • A MODE wire has 12 Vdc.<br>• Check the position of Switch 1 on SW-2 in the Serial Interface Module. If Switch 1 is down (ON), ensure that the ENABLE control wires (Green/White and Orange/Black) have 12 Vdc applied.<br>• Check the positions of the DIP switches in the Interface Module.<br>• Check the fuses on the mainbar controller.<br>• Reset the controller (page 31). |
| An LED module does not light | • Swap the LED board with good board to see if the board is bad.<br>• Check the connections of the cable that goes from the light bar controller to the LED ROC board.<br>• If it is a rear module, check the SignalMaster connections.<br>• Reset the controller (page 31). |
| Half of an LED module does not light | • Replace the ROC board that the LED is on.<br>• Reset the controller (page 31). |
| The light bar turns off when the Flash Takedown/ Alley lights turn on | • Ensure that the vehicle battery is fully charged.<br>• Verify that the light bar's Red power line (+BAT) and Black ground-power line (–GND) are properly connected to a good, fully charged 12-volt battery.<br>• Check the Red power line (+BAT) and the Black ground-power line (–GND) connections in the light bar and vehicle.<br>• Reset the controller (page 31). |

| Problem | Corrective Action |
|---|---|
| The light bar has a delayed response to being shut off | • Ensure that the connections on the Serial Interface Module are kept separate from strobe supplies.<br>• Check all the ground connections, especially on the Serial Interface Module.<br>• Reset the controller (page 31). |
| A Flash Takedown/ Alley light stays on with ignition power applied | • Ensure that there is no voltage on the corresponding control wire.<br>• To see if the ROC board is bad, swap it with a similar board.<br>• Swap the cables on the light bar controller outputs with a known good output. If the problem moves to another halogen light, send the light bar controller to Federal Signal for repair.<br>• Reset the controller (page 31). |
| Takedown/ alley lights work, but Flash Takedown/ Alley lights do not work | • Ensure that 12 Vdc is applied to the takedown and alley (Red/Black) control wire.<br>• Check the 12 Vdc power and negative ground connections to the light bar to ensure that there is enough current.<br>• Reset the controller (page 31). |
| Only one takedown light turns on | • Check the connections from the light bar controller to the ROC boards and ensure that they are in the proper locations.<br>• Reset the controller (page 31). |
| SignalMaster LEDs do not light | • Check the switch settings on the Serial Interface Module. Ensure that they are set for the correct operation. See Table 6 on page 16.<br>• Ensure that Switch 4 on SW-2 is in the correct position for the selected operation on the Serial Interface Module and ignition power was removed and reapplied.<br>• Check the connections at the SignalMaster controller. If the controller is a model SS2000SM, ensure that the connector has power and the ground is connected to pins 10 and 11 on the SignalMaster plug.<br>• Reset the controller (page 31). |

# Getting Technical Support and Service

For technical support and service, please contact:

Service Department
Federal Signal Corporation
Phone: 1-800-433-9132
Email: empserviceinfo@fedsig.com
www.fedsig.com

## Getting Repair Service

The Federal Signal factory provides technical assistance with any problems that cannot be handled locally.

Any units returned to Federal Signal for service, inspection, or repair must be accompanied by a Return Material Authorization (RMA). Obtain a RMA from a local Distributor or Manufacturer's Representative.

Provide a brief explanation of the service requested, or the nature of the malfunction.

Address all communications and shipments to the following:

Federal Signal Corporation
Service Department
2645 Federal Signal Drive
University Park, Ẽ 60484-3167

## Ordering Replacement Parts

To order replacement parts, call Customer Support at 1-800-264-3578, 7 a.m. to 5 p.m., Monday through Friday (CT) or contact your nearest distributor.

**Table 10 Replacement parts**

| Description | Part Number |
|---|---|
| PCB Assembly End (Configured) | Contact Factory |
| PCB Assembly, Intermediate (Configured) | Contact Factory |
| PCB Assembly, Center (Configured) | Contact Factory |
| PCB Assembly, Controller (Configured) | Contact Factory |
| Nut, 1/4-20, Barrel | 7065071 |
| Seal, Lip, Clear (5.5 feet per end section; 3.5 feet per center section) | 8583020-01 |
| O-Ring, Lens Nut | 7067016 |
| Top, End, Clear | 8653101 |
| Top, End, Amber | 8653101-02 |
| Top, End, Blue | 8653101-03 |
| Top, End, Red | 8653101-04 |
| Top, End, Gray | 8653101-GRY |
| Top, Center, Clear | 8653103 |
| Top, Center, Amber | 8653103-02 |
| Top, Center, Blue | 8653103-03 |
| Top, Center, Red | 8653103-04 |
| Top, Center, Gray | 8653103-GRY |
| 21-inch PCB Assembly | Contact Factory |
| Top, 21-inch, Amber | 865302445-A |
| Top, 21-inch, Clear | 865302445 |
| Top, 21-inch, Gray | 865302445-GRY |

**FEDERAL SIGNAL**
Safety and Security Systems

2645 Federal Signal Drive
University Park, Illinois 60484-3167

www.fedsig.com

Customer Support
Police/Fire-EMS: 800-264-3578 • +1 708 534-3400
Work Truck: 800-824-0254 • +1 708 534-3400

Technical Support 800-433-9132 • +1 708 534-3400